REVISIONS				
ZONE	REV	DESCRIPTION	DATE	APPROVED

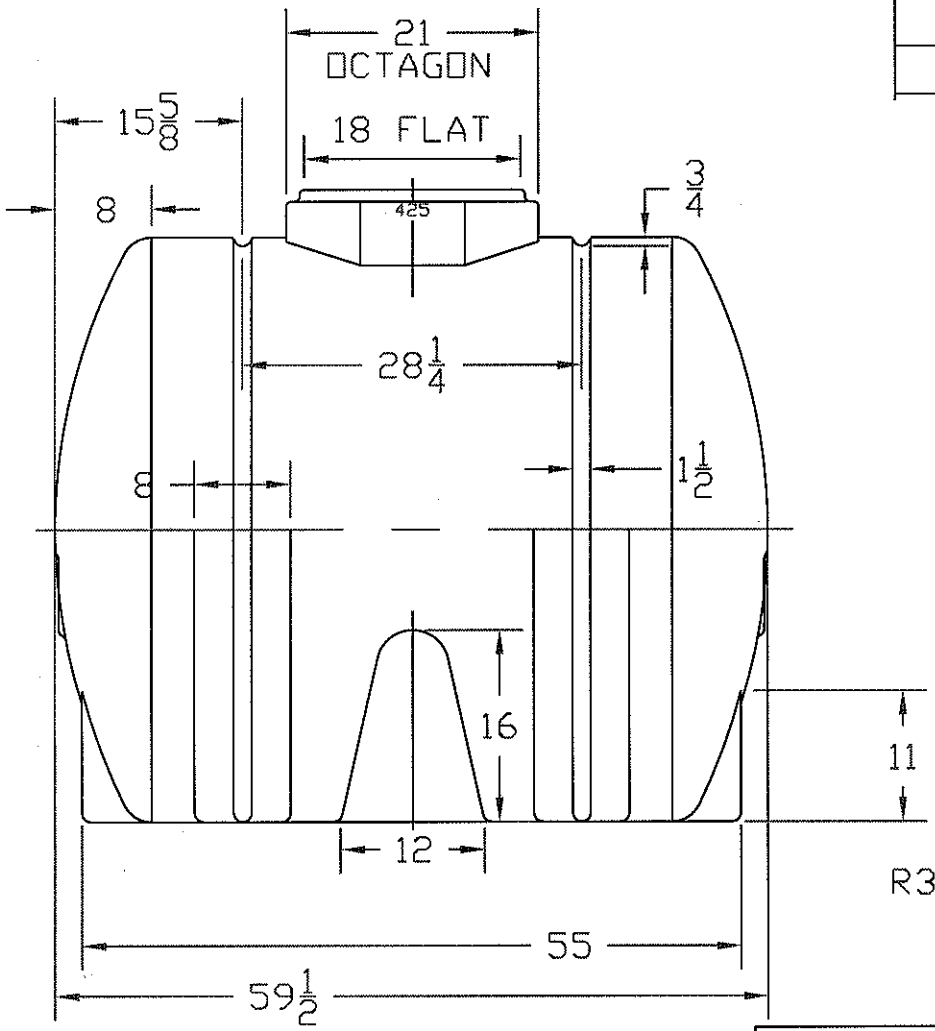

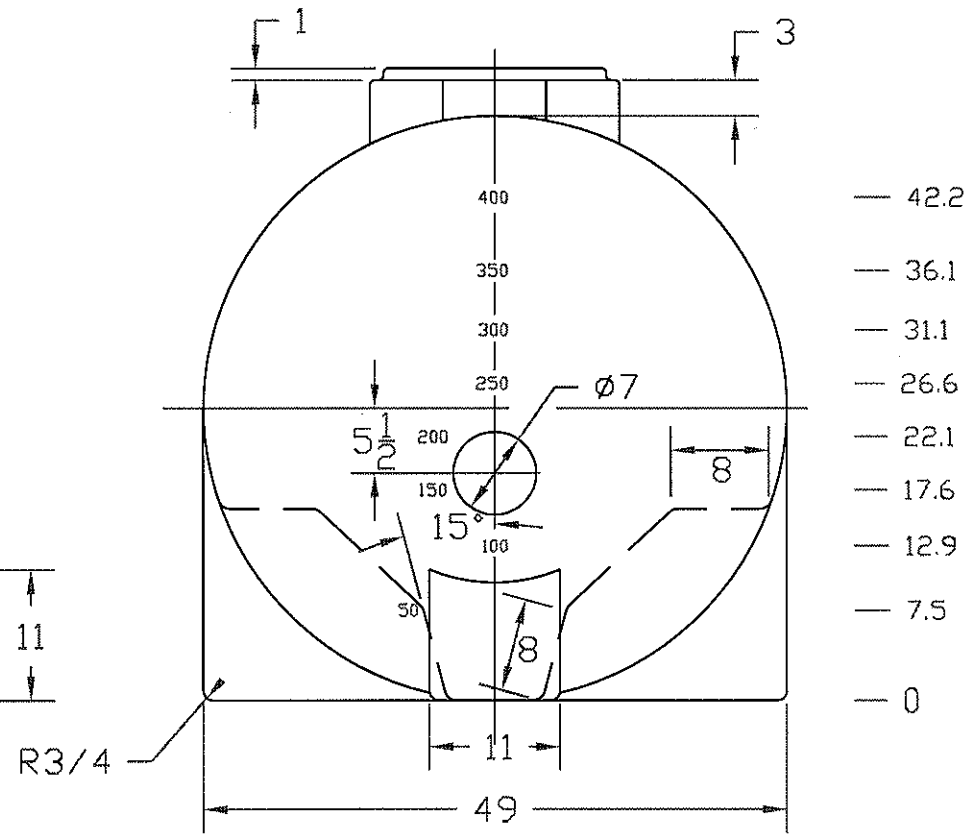

NOTE: GALLONAGE MARKS ONE END

NORWESCO
ST. BONIFACIUS, MN

425 GAL HORIZONTAL TANK

JTP 10JUL01	SIZE A	FSCM NO.	DWG NO.	REV
	SCALE 1/16		SHEET	